UPLOGIX

Installing the Uplogix remote management appliance

1

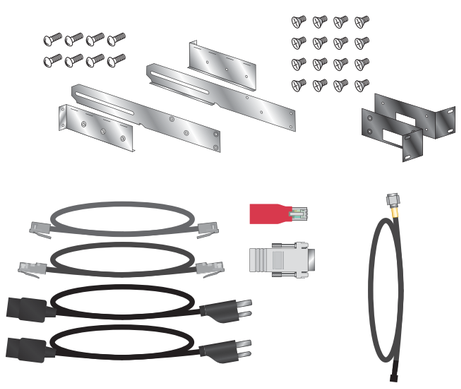

2

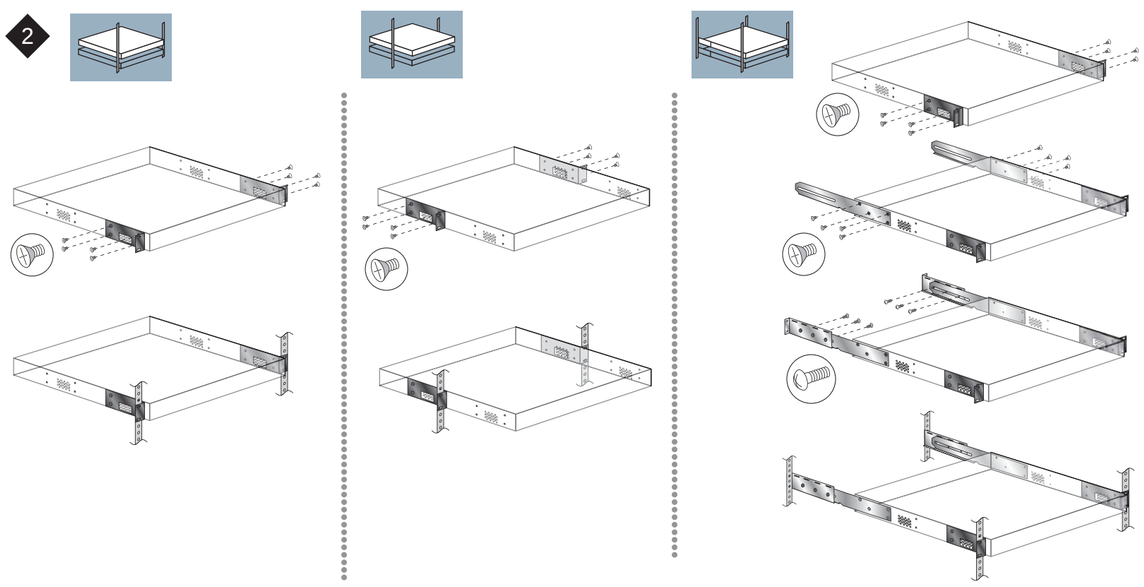

3

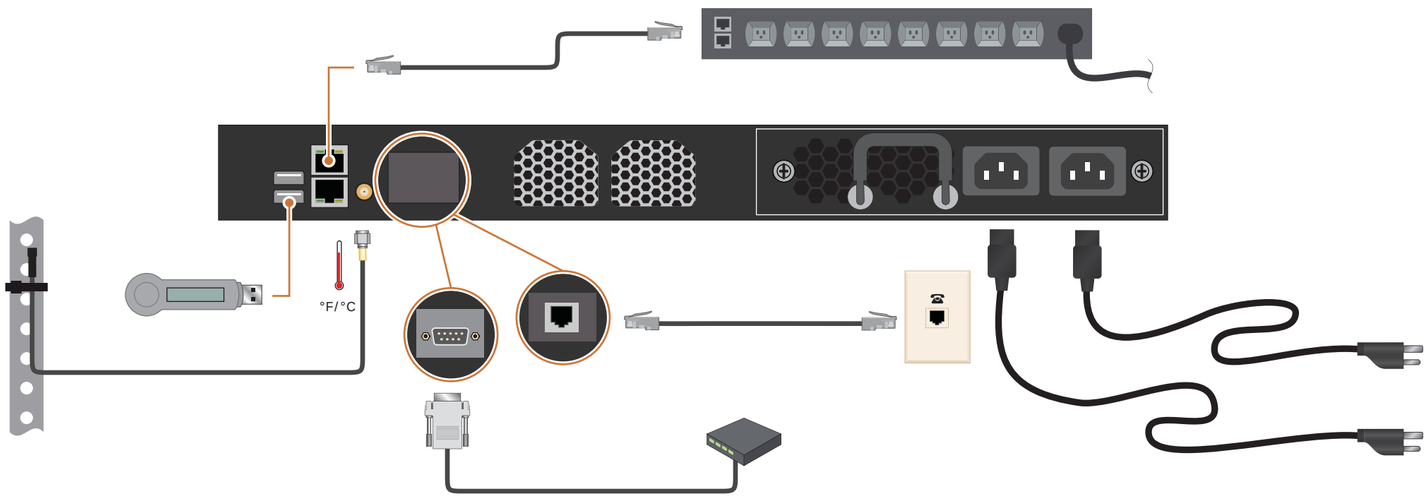

4

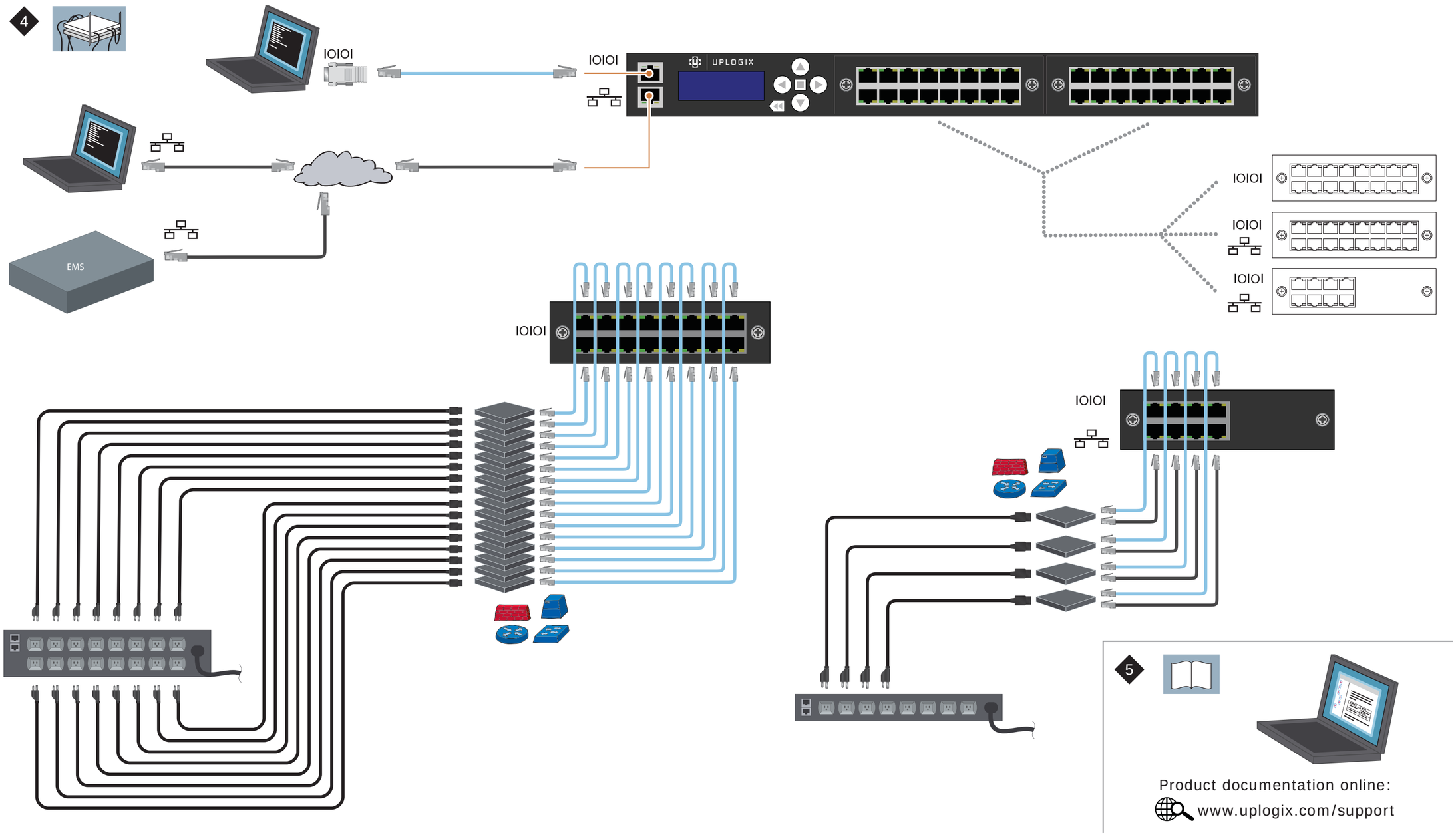

5

Product documentation online:

www.uplogix.com/support

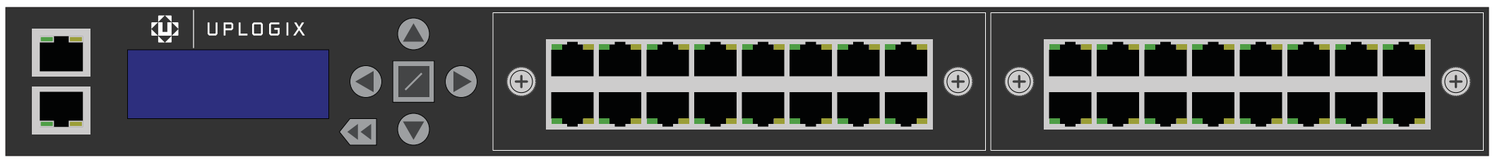

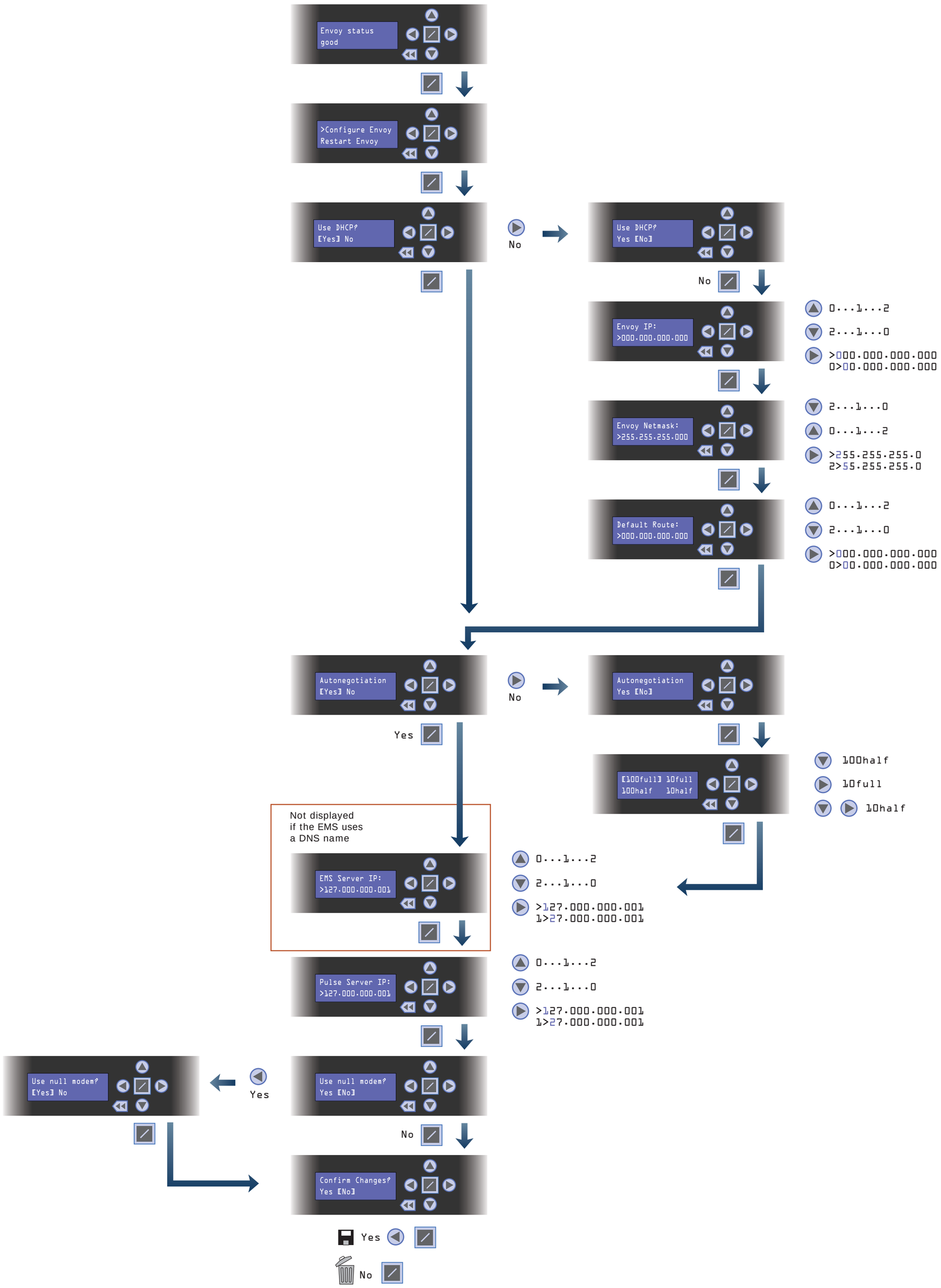

www.uplogix.com/support
support@uplogix.com

© 2009 Uplogix, Inc. All rights reserved.
Uplogix and the *Uplogix logo* are trademarks of Uplogix, Inc. in the United States and other jurisdictions.
31-8001-03